更多咨询请登录 www.qyconsult.com 群尧咨询

Write your name here

Surname	Other names

Pearson Edexcel International Advanced Level

Centre Number | Candidate Number

Physics

Advanced Subsidiary
Unit 2: Physics at Work

Monday 9 June 2014 – Morning
Time: 1 hour 30 minutes

Paper Reference
WPH02/01

You must have:
Ruler, protractor

Total Marks

Instructions

- Use **black** ink or ball-point pen.
- **Fill in the boxes** at the top of this page with your name, centre number and candidate number.
- Answer **all** questions.
- Answer the questions in the spaces provided – *there may be more space than you need.*

Information

- The total mark for this paper is 80.
- The marks for **each** question are shown in brackets – *use this as a guide as to how much time to spend on each question.*
- Questions labelled with an **asterisk** (*) are ones where the quality of your written communication will be assessed – *you should take particular care with your spelling, punctuation and grammar, as well as the clarity of expression, on these questions.*
- The list of data, formulae and relationships is printed at the end of this booklet.
- Candidates may use a scientific calculator.

Advice

- Read each question carefully before you start to answer it.
- Keep an eye on the time.
- Try to answer every question.
- Check your answers if you have time at the end.

Turn over ▶

P42927A

©2014 Pearson Education Ltd.

1/1/1/1/1/

P 4 2 9 2 7 A 0 1 2 8

PEARSON

SECTION A

Answer ALL questions.

For questions 1–10, in Section A, select one answer from A to D and put a cross in the box ☒. If you change your mind, put a line through the box ☒ and then mark your new answer with a cross ☒.

1 Which of the following is a base SI quantity?

☐ **A** ampere

☐ **B** charge

☐ **C** coulomb

☐ **D** current

(Total for Question 1 = 1 mark)

2

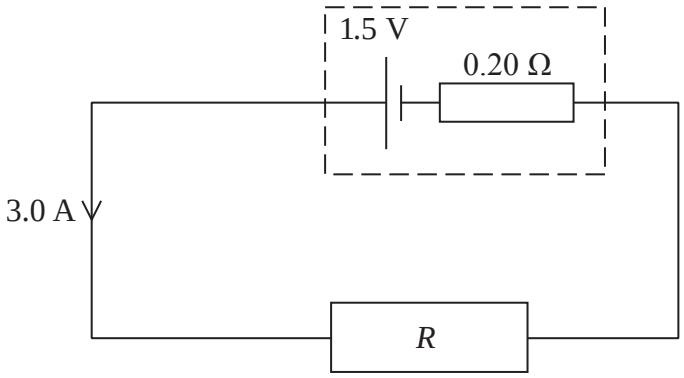

The diagram represents a circuit containing a cell of emf 1.5 V and internal resistance 0.20 Ω in series with a resistor of resistance *R*. The current is 3.0 A.

The value of *R* is

☐ **A** 0.30 Ω

☐ **B** 0.50 Ω

☐ **C** 0.70 Ω

☐ **D** 1.8 Ω

(Total for Question 2 = 1 mark)

更多咨询请登录 www.qyconsult.com 群尧咨询

3 A metal wire is heated while the potential difference across it remains constant.

The resistance of the wire increases because

☒ **A** the drift speed of the electrons increases.

☒ **B** the lattice atoms vibrate with greater amplitude.

☒ **C** there are fewer charge carriers per unit volume.

☒ **D** there are more charge carriers per unit volume.

(Total for Question 3 = 1 mark)

4 Electrons are accelerated across a potential difference of 75 kV in an X-ray tube.

How much work is done on a single electron?

☒ **A** 2.1×10^{-24} J

☒ **B** 2.1×10^{-21} J

☒ **C** 1.2×10^{-17} J

☒ **D** 1.2×10^{-14} J

(Total for Question 4 = 1 mark)

5 An electron pulse in an X-ray tube produces an average current of 3.0 mA for 0.5 s.

How much charge is transferred by this pulse?

☒ **A** 6.0×10^{-3} C

☒ **B** 1.5×10^{-3} C

☒ **C** 1.5 C

☒ **D** 6.0 C

(Total for Question 5 = 1 mark)

6 The diagram below shows a standing wave on a string.

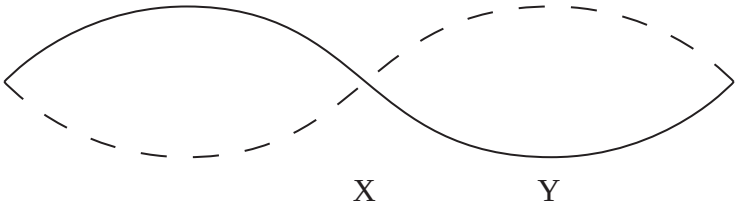

A standing wave is created when two progressive waves travelling in opposite directions combine.

Select the line of the table which correctly indicates the phase difference between the progressive waves at X and the phase difference between the progressive waves at Y.

	Phase difference between progressive waves at X	Phase difference between progressive waves at Y
☒ **A**	π	π
☒ **B**	π	2π
☒ **C**	2π	π
☒ **D**	2π	2π

(Total for Question 6 = 1 mark)

7 Which of the following phenomena provides evidence that light waves are transverse?

☒ **A** diffraction

☒ **B** interference

☒ **C** polarisation

☒ **D** refraction

(Total for Question 7 = 1 mark)

更多咨询请登录 www.qyconsult.com 群尧咨询

8 The type of electromagnetic radiation used for mobile telephone transmissions is

☒ **A** gamma rays.

☒ **B** microwave.

☒ **C** ultraviolet.

☒ **D** visible light.

(Total for Question 8 = 1 mark)

9 Select the current-potential difference (*I*-*V*) graph that shows resistance increasing with increasing potential difference.

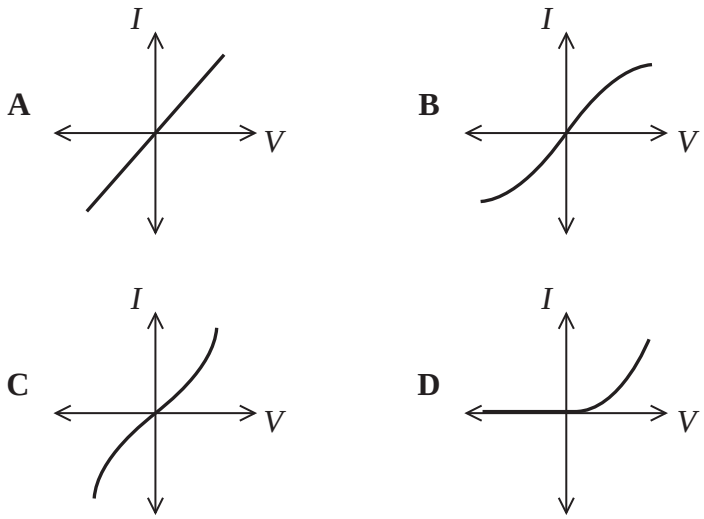

☒ **A**

☒ **B**

☒ **C**

☒ **D**

(Total for Question 9 = 1 mark)

10 A student carries out an experiment to determine the resistivity of a wire of cross-sectional area A. He measures the resistance *R* of the wire for different lengths *l*.

When plotted, which of the following graphs would give a gradient that could be used to calculate resistivity?

☒ **A**

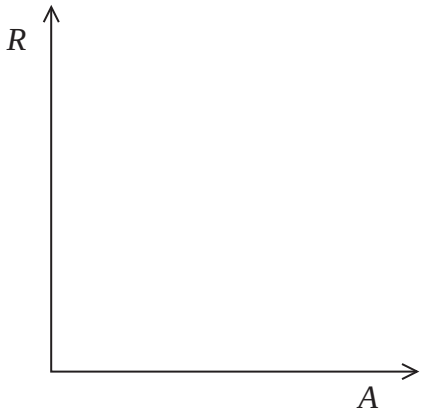

☒ **B**

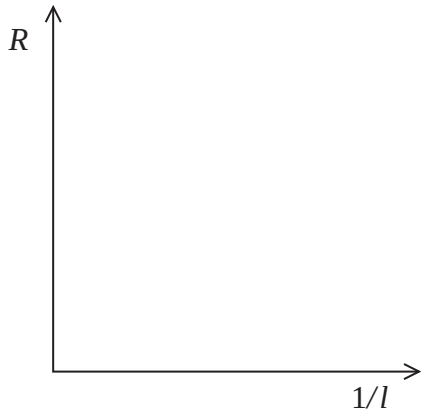

☒ **C**

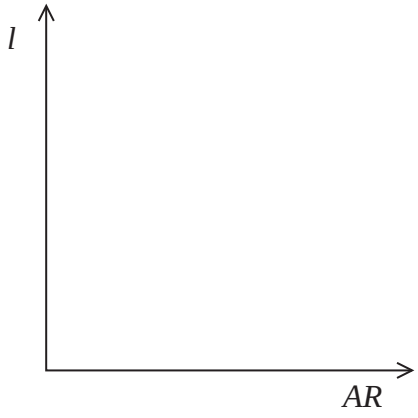

☒ **D**

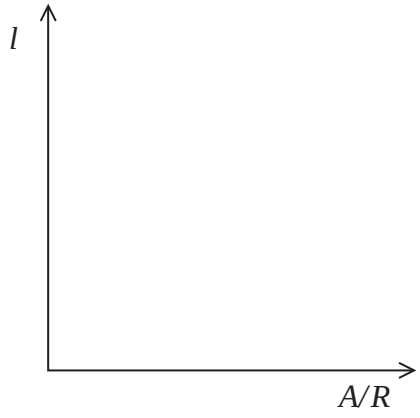

(Total for Question 10 = 1 mark)

TOTAL FOR SECTION A = 10 MARKS

更多咨询请登录 www.qyconsult.com 群尧咨询

SECTION B

Answer ALL questions in the spaces provided.

11 A polarising filter is placed in front of a laser. When the laser is switched on a red spot is seen on a screen. The filter is then rotated through 180°. As the filter is rotated, the intensity of the red spot falls almost to zero and then returns to the original intensity.

Explain these observations.

(3)

.....

.....

.....

.....

.....

.....

.....

.....

.....

.....

(Total for Question 11 = 3 marks)

更多咨询请登录 www.qyconsult.com 群尧咨询

12 In 1845, a scientist called Christophorus Buys Ballot tested the Doppler effect for sound. He arranged for trumpeters to play a note of one frequency on a moving train. Stationary musicians standing by the track listened as the train went past and compared what they heard with the original note.

(a) Explain how sound travels through air.

(3)

.....

.....

.....

.....

.....

.....

.....

*(b) Describe and explain what the stationary musicians would hear as the train travelled towards them and then away from them.

(4)

.....

.....

.....

.....

.....

.....

.....

.....

.....

.....

.....

(Total for Question 12 = 7 marks)

更多咨询请登录 www.qyconsult.com 群尧咨询

13 Cathode rays were discovered in 1876. In 1897 J.J. Thomson showed that these rays were made of individual particles. These became known as electrons.

In 1927 at Aberdeen University, diffraction was observed when a beam of electrons was passed through a thin metal film.

Use this information to discuss how scientific ideas develop. Experimental details are not required.

(4)

.....

.....

.....

.....

.....

.....

.....

.....

.....

.....

(Total for Question 13 = 4 marks)

14 The photograph shows a light dependent resistor (LDR).

An LDR is made of semi-conducting material.

The diagram shows energy bands for a semi-conducting material.

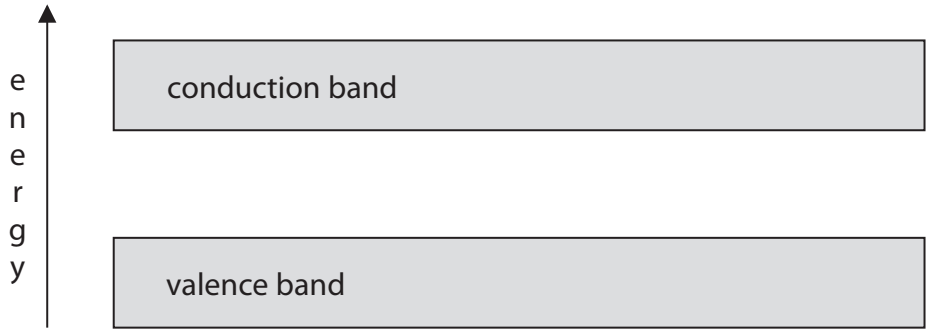

The LDR has a much lower resistance when in the light than it does in the dark. This is because the photons provide energy to electrons in the valence band, exciting them into the conduction band.

(a) The energy band gap for this material is 2.42 eV.

Calculate the minimum frequency of light required to produce a reduction in resistance.

(3)

.....

.....

.....

.....

.....

Minimum frequency = ...

更多咨询请登录 www.qyconsult.com 群尧咨询

*(b) The LDR is made of a long, thin zigzag line of semiconducting material on a non-conducting base.

Explain how this design ensures the LDR has the maximum resistance at any given light intensity.

(3)

.....

.....

.....

.....

.....

.....

.....

.....

.....

.....

.....

(Total for Question 14 = 6 marks)

15 (a) The photograph shows a torch illuminating a surface.

A student takes measurements, when the torch is first switched on, to determine the efficiency of the torch bulb at transferring electrical energy to light energy.

The student's measurements are shown below.

current = 0.14 A

p.d. = 3.1 V

light intensity = 1.45 W m^{-2}

area illuminated = 0.11 m^2

Calculate the efficiency of the torch bulb.

(4)

.....

.....

.....

.....

.....

.....

.....

.....

Efficiency = ...

更多咨询请登录 www.qyconsult.com 群尧咨询

(b) Over time, the intensity of the light provided by the torch bulb decreases. The student decides to determine the efficiency over the whole period for which the torch shines.

Explain the advantage of using sensors and dataloggers to make the necessary measurements rather than using conventional meters.

(3)

.....

.....

.....

.....

.....

.....

(Total for Question 15 = 7 marks)

更多咨询请登录 www.qyconsult.com 群尧咨询

BLANK PAGE

更多咨询请登录 www.qyconsult.com 群尧咨询

16 Dishwashing machines use a solution known as rinse aid to prevent water from leaving marks on the dishes as they dry.

(a) A student carries out an experiment to determine the refractive index of rinse aid.

The photograph shows a ray of light passing through a rectangular container of rinse aid.

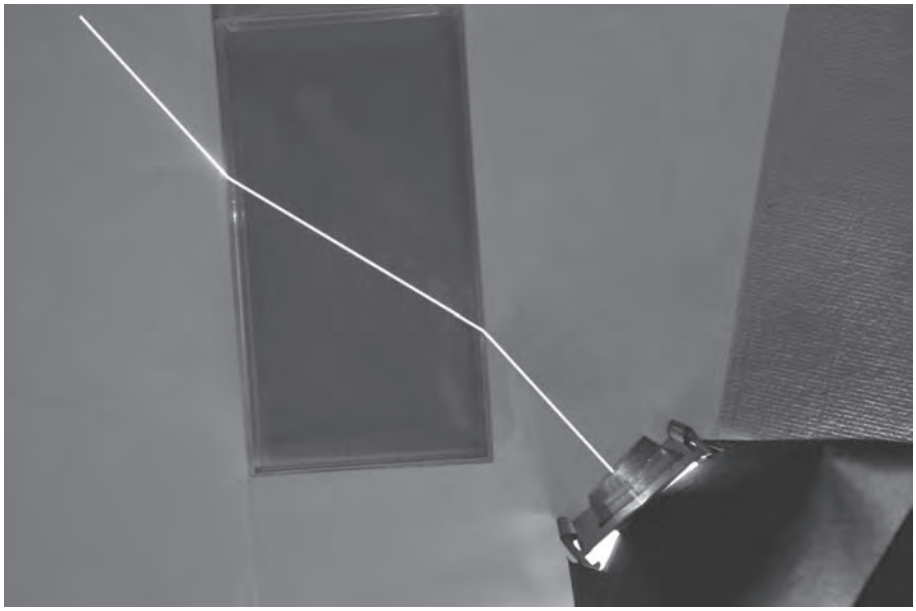

Take measurements from the photograph to determine the refractive index of the rinse aid. You must record your measurements.

You may ignore any effect from the container.

(3)

Measurements

.....

.....

Calculation

.....

.....

.....

.....

(b) The rinse aid is stored in a small reservoir in the dishwasher with an optical dipstick to indicate the level of liquid.

The dipstick is a clear plastic cylinder with a pointed end that dips into the liquid.

Show that the critical angle for light in the plastic, when surrounded by rinse aid, is about 60°.

speed of light in rinse aid is 2.22×10^8 m s^{-1}

speed of light in plastic is 2.00×10^8 m s^{-1}

(3)

.....

.....

.....

.....

.....

.....

(c) The photographs below show the difference between the appearance of the dipstick when the reservoir is empty and when it is full.

Appearance from above when empty

Appearance from above when full

When the reservoir is empty, the dipstick is surrounded by air. It appears light because light from the surroundings is reflected back to the viewer.

When the reservoir is full, the dipstick is surrounded by rinse aid and it appears dark.

更多咨询请登录 www.qyconsult.com 群尧咨询

The diagrams below show side views of the dipstick.

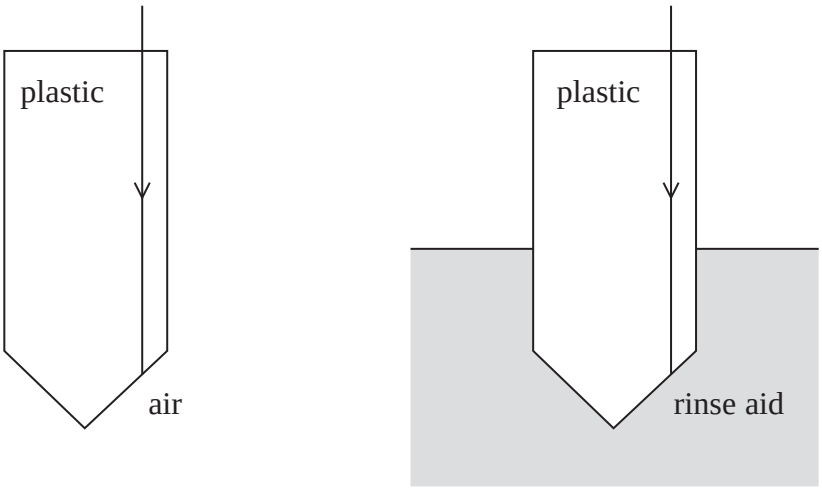

Complete the diagrams to show the paths of light when the rinse aid level is low and when it is high.

critical angle for plastic surrounded by air = 42°

(4)

(Total for Question 16 = 10 marks)

更多咨询请登录 www.qyconsult.com 群尧咨询

17 Some cars have a reversing sensor to aid parking.

When the car is reversing, a transducer on the rear of the car emits pulses of ultrasound. The pulses are reflected from nearby objects and received by the transducer. If an object is detected close to the car an alarm sound is produced to warn the driver.

(a) (i) Determine whether a pulse of duration 5×10^{-4} s would be suitable to detect objects as close as 10 cm behind the car.

speed of sound = 330 m s^{-1}

(3)

.....

.....

.....

.....

(ii) Explain why the reversing sensor would **not** work if it used audible sound rather than ultrasound.

(2)

.....

.....

.....

.....

更多咨询请登录 www.qyconsult.com 群尧咨询

(b) Such sensors depend on reflection and do not always work for sloping objects, such as rubbish skips, as shown in the photograph.

Suggest why the sensor might not detect a sloping object.

(1)

.....

.....

(Total for Question 17 = 6 marks)

18 A student is constructing a heating system to keep insects warm in their tank. The student decides to use a potential divider circuit with a negative temperature coefficient thermistor to control the heater.

The circuit is shown below. An electronic switch is connected across AB and switches on a heating circuit only when the potential difference across AB is above a certain value.

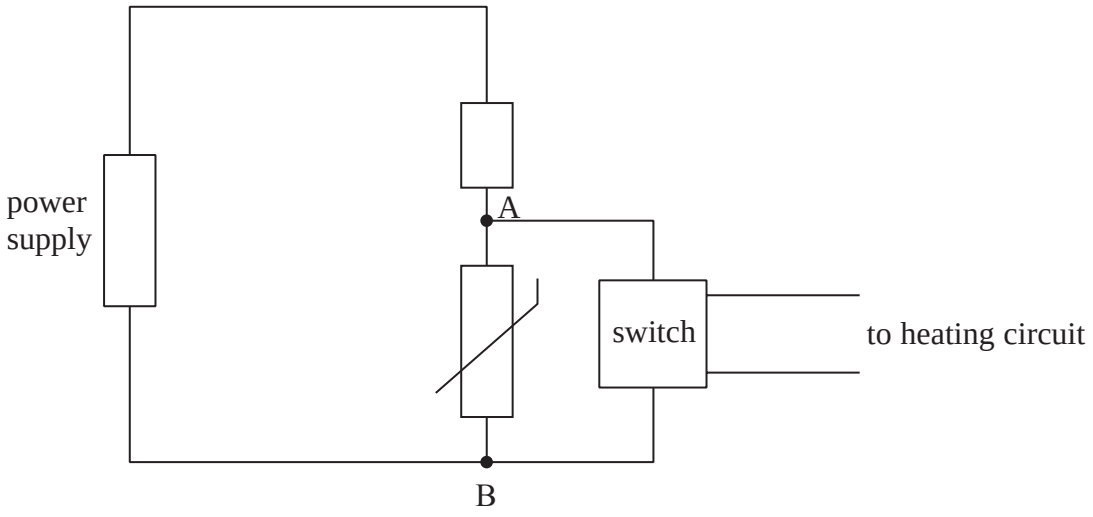

(a) Explain how the circuit will ensure that the insects do not get too hot or too cold.

(4)

.....

.....

.....

.....

.....

.....

.....

.....

更多咨询请登录 www.qyconsult.com 群尧咨询

(b) Suggest why the switch and heating circuit are included, rather than connecting a heater directly across AB in parallel with the thermistor.

(2)

.....

.....

.....

.....

(Total for Question 18 = 6 marks)

更多咨询请登录 www.qyconsult.com 群尧咨询

19 The surface of the Moon is covered with a layer of dust. This dust has been formed over billions of years by meteorites striking the Moon's surface.

Astronauts on the Moon noticed that the dust stuck to surfaces such as their suits and instruments. This was because the dust has an electrical charge.

It has been suggested that the dust is charged on the day side of the Moon because of the photoelectric effect. This effect is caused by ultraviolet radiation with photon energy greater than the work function of the dust material.

(a) Explain what is meant by

(i) a photon

(2)

.....

.....

.....

(ii) the work function

(1)

.....

.....

(b) Explain how the photoelectric effect could cause the dust to become charged.

(3)

.....

.....

.....

.....

.....

更多咨询请登录 www.qyconsult.com 群尧咨询

(c) (i) Calculate the wavelength of ultraviolet radiation with photon energy equal to the work function of the dust material.

work function = 6.56×10^{-19} J

(3)

.....

.....

.....

.....

.....

(ii) Explain whether this is a minimum or maximum wavelength for the photoelectric effect to occur in this case.

(2)

.....

.....

.....

.....

.....

(Total for Question 19 = 11 marks)

20 Astronomers sometimes observe the Sun using a single wavelength from the atomic spectrum of hydrogen. They can filter out other wavelengths using a Fabry-Perot interferometer.

The diagram shows what happens when a ray of light from the Sun enters the interferometer.

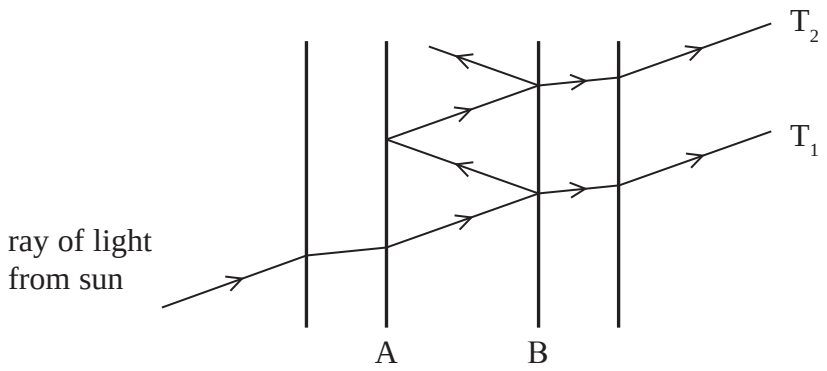

The light is reflected between the inner surfaces, A and B, of two parallel glass plates. Each time light strikes surface B, some is reflected and some is transmitted. The transmitted rays, which have different path lengths, are then brought together so that they combine.

(a) After combining only certain wavelengths remain.

Explain why certain wavelengths remain but others disappear.

(6)

.....

.....

.....

.....

.....

.....

.....

.....

更多咨询请登录 www.qyconsult.com 群尧咨询

(b) Explain why the atomic spectrum of hydrogen only has a number of specific visible wavelengths of light.

(4)

.....

.....

.....

.....

.....

.....

.....

(Total for Question 20 = 10 marks)

TOTAL FOR SECTION B = 70 MARKS

TOTAL FOR PAPER = 80 MARKS

List of data, formulae and relationships

Acceleration of free fall	$g = 9.81\ \mathrm{m\ s^{-2}}$	(close to Earth's surface)
Electron charge	$e = -1.60 \times 10^{-19}\ \mathrm{C}$	
Electron mass	$m_e = 9.11 \times 10^{-31}\ \mathrm{kg}$	
Electronvolt	$1\ \mathrm{eV} = 1.60 \times 10^{-19}\ \mathrm{J}$	
Gravitational field strength	$g = 9.81\ \mathrm{N\ kg^{-1}}$	(close to Earth's surface)
Planck constant	$h = 6.63 \times 10^{-34}\ \mathrm{J\ s}$	
Speed of light in a vacuum	$c = 3.00 \times 10^{8}\ \mathrm{m\ s^{-1}}$	

Unit 1

Mechanics

Kinematic equations of motion	$v = u + at$ $s = ut + \frac{1}{2}at^2$ $v^2 = u^2 + 2as$
Forces	$\Sigma F = ma$ $g = F/m$ $W = mg$
Work and energy	$\Delta W = F\Delta s$ $E_k = \frac{1}{2}mv^2$ $\Delta E_{grav} = mg\Delta h$

Materials

Stokes' law	$F = 6\pi\eta rv$
Hooke's law	$F = k\Delta x$
Density	$\rho = m/V$
Pressure	$p = F/A$
Young modulus	$E = \sigma/\varepsilon$ where Stress $\sigma = F/A$ Strain $\varepsilon = \Delta x/x$
Elastic strain energy	$E_{el} = \frac{1}{2}F\Delta x$

Unit 2

Waves

Wave speed	$v = f\lambda$
Refractive index	${}_1\mu_2 = \sin i / \sin r = v_1/v_2$

Electricity

Potential difference	$V = W/Q$
Resistance	$R = V/I$
Electrical power, energy and efficiency	$P = VI$ $P = I^2R$ $P = V^2/R$ $W = VIt$

$$\% \text{ efficiency} = \frac{\text{useful energy output}}{\text{total energy input}} \times 100$$

$$\% \text{ efficiency} = \frac{\text{useful power output}}{\text{total power input}} \times 100$$

Resistivity	$R = \rho l/A$
Current	$I = \Delta Q/\Delta t$ $I = nqvA$
Resistors in series	$R = R_1 + R_2 + R_3$
Resistors in parallel	$\frac{1}{R} = \frac{1}{R_1} + \frac{1}{R_2} + \frac{1}{R_3}$

Quantum physics

Photon model	$E = hf$
Einstein's photoelectric equation	$hf = \phi + \frac{1}{2}mv^2_{max}$

更多咨询请登录 www.qyconsult.com 群尧咨询

BLANK PAGE